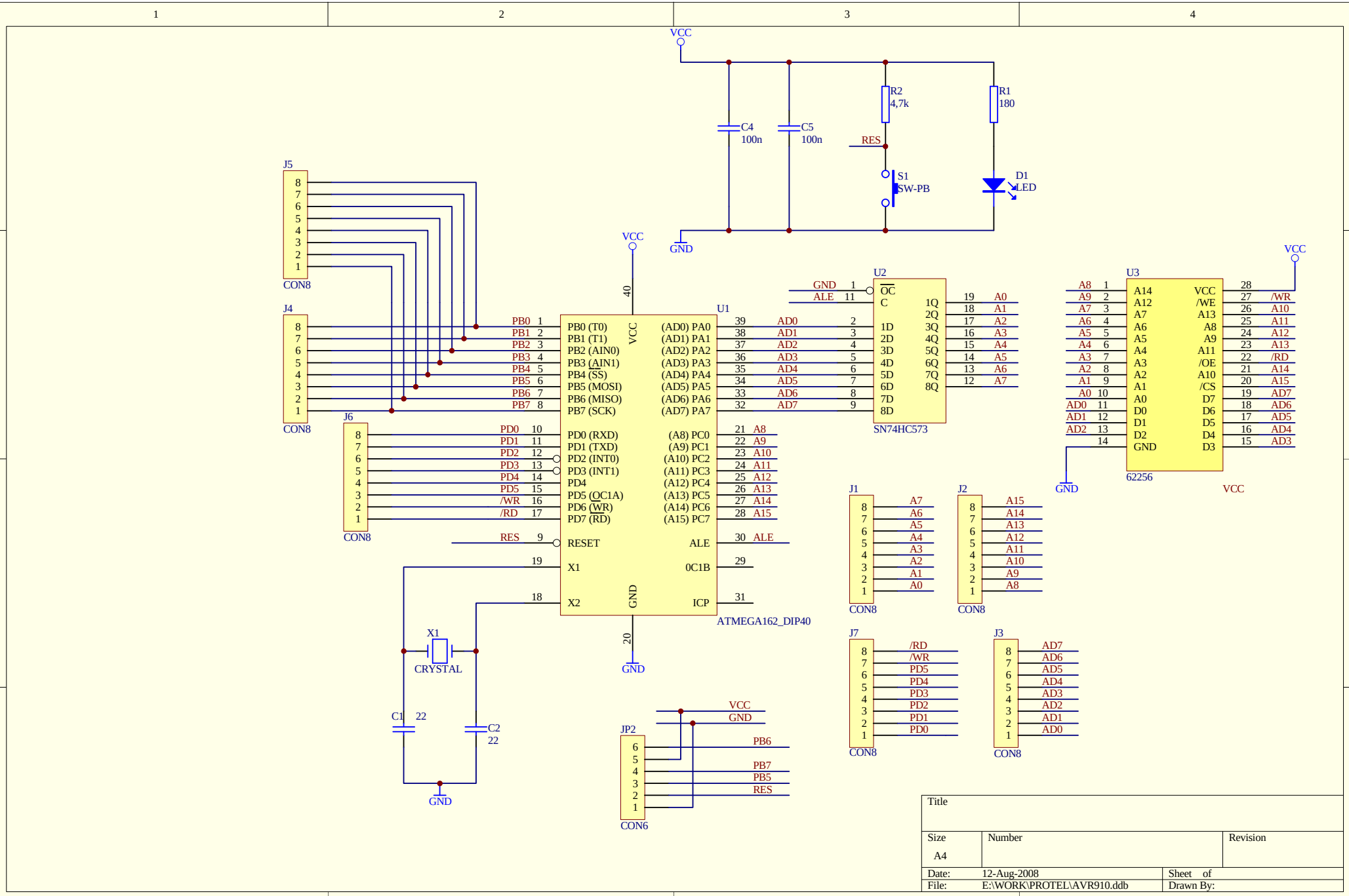
VCC
C4
100n
C5
100n
R2
4,7k
R1
180
RES
S1
SW-PB
D1
LED
GND
J5
CON8
J4
CON8
J6
CON8
U1
ATMEGA162_DIP40
PB0 (T0)
PB1 (T1)
PB2 (AIN0)
PB3 (AIN1)
PB4 (SS)
PB5 (MOSI)
PB6 (MISO)
PB7 (SCK)
PD0 (RXD)
PD1 (TXD)
PD2 (INT0)
PD3 (INT1)
PD4
PD5 (OC1A)
PD6 (WR)
PD7 (RD)
RESET
X1
X2
(AD0) PA0
(AD1) PA1
(AD2) PA2
(AD3) PA3
(AD4) PA4
(AD5) PA5
(AD6) PA6
(AD7) PA7
(A8) PC0
(A9) PC1
(A10) PC2
(A11) PC3
(A12) PC4
(A13) PC5
(A14) PC6
(A15) PC7
ALE
0C1B
ICP
U2
SN74HC573
U3
62256
J1
CON8
J2
CON8
J7
CON8
J3
CON8
X1
CRYSTAL
C1
22
C2
22
JP2
CON6
Title
Size
A4
Number
Revision
Date:
12-Aug-2008
Sheet of
File:
E:\WORK\PROTEL\AVR910.ddb
Drawn By: